NEWARK STANDARD 6" LATERAL HYDRANT

NOTES:

1. HYDRANT VALVE SHALL BE MUELLER RESILIENT WEDGE GATE VALVE M.J. X M.J. OPENING CLOCKWISE. AWWA–C509
2. ALL MECHANICAL JOINTS SHALL HAVE RETAINER GLANDS.
3. EACH HYDRANT SHALL HAVE: (2) $2\frac{1}{2}$" (NYT) AND (1) $4\frac{1}{2}$" (NST) NOZZLES.
4. UPPER LOWER PRESSURE EXTENSION: 6",12",18".
5. LOW PRESSURE HYDRANTS SHALL HAVE YELLOW STAND PIPES WITH GREEN BONNETS, UNLESS OTHERWISE SPECIFIED.
6. HIGH PRESSURE HYDRANTS SHALL HAVE RED STAND PIPES WITH RED BONNETS.
7. WHERE RODDING IS NOT AVAILABLE ON HIGH PRESSURE HYDRANTS, SOLID CONCRETE BLOCKS MUST BE ENCASED IN CONCRETE.
8. ALL HYDRANTS MUST BE PRESSURE TESTED IN THE PRESENCE OF THE NEWARK WATER UTILITY REPRESENTATIVE BEFORE BECOMING OPERATIONAL.

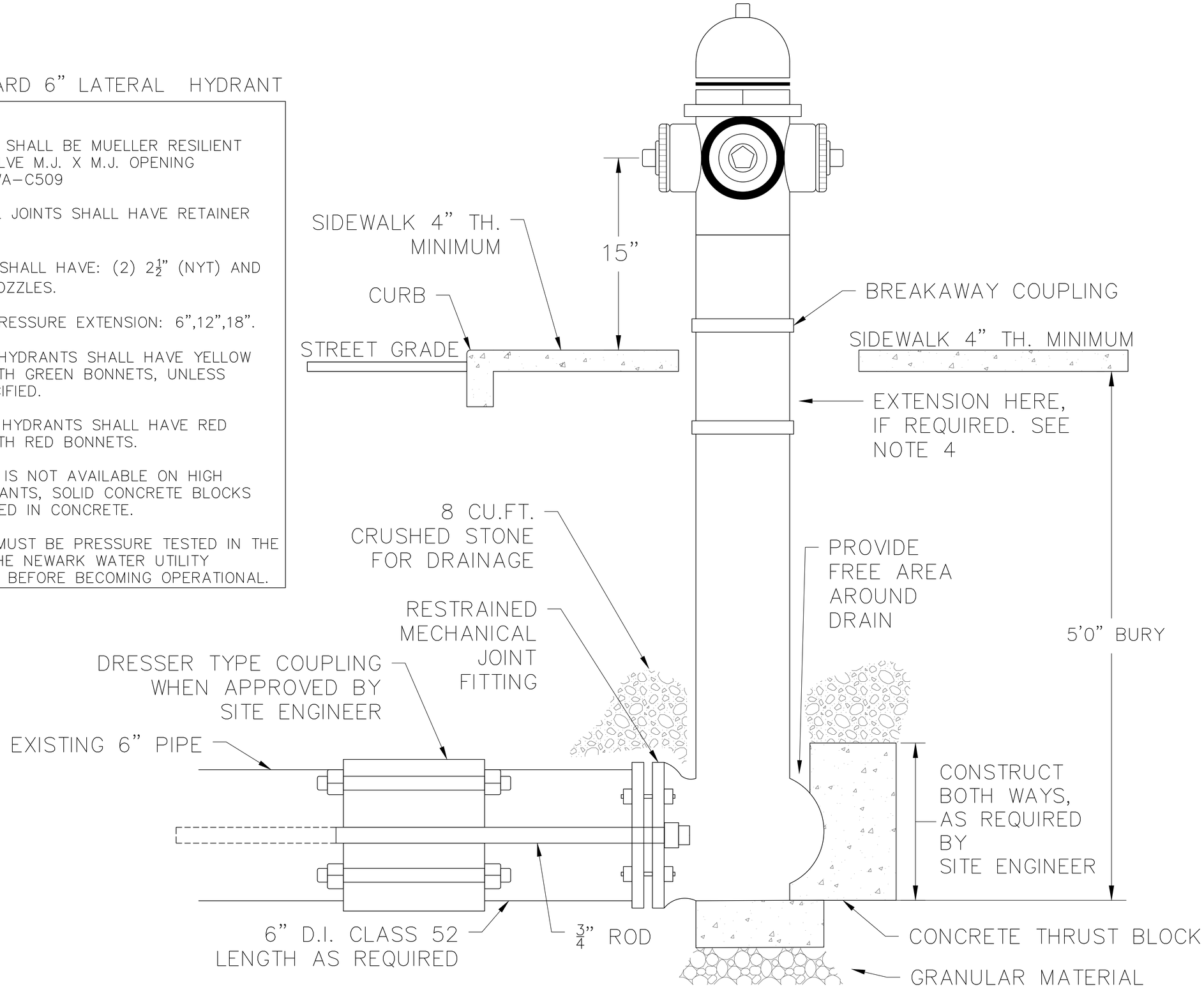

CREATED: 2-20-2023

WATER - DETAIL 15

CITY OF NEWARK, NEW JERSEY

NEWARK STANDARD 6" LATERAL HYDRANT REPLACEMENT AFTER THE VALVE DETAIL